| | | |
|---|---|---|
| ALEX-TECH | 刀塔行程圖<br>VT-15 NON LIVE TURRET | 1010823修正<br>VT-15 |

SW=316 20mm 12T HYDRAULIC TURRET

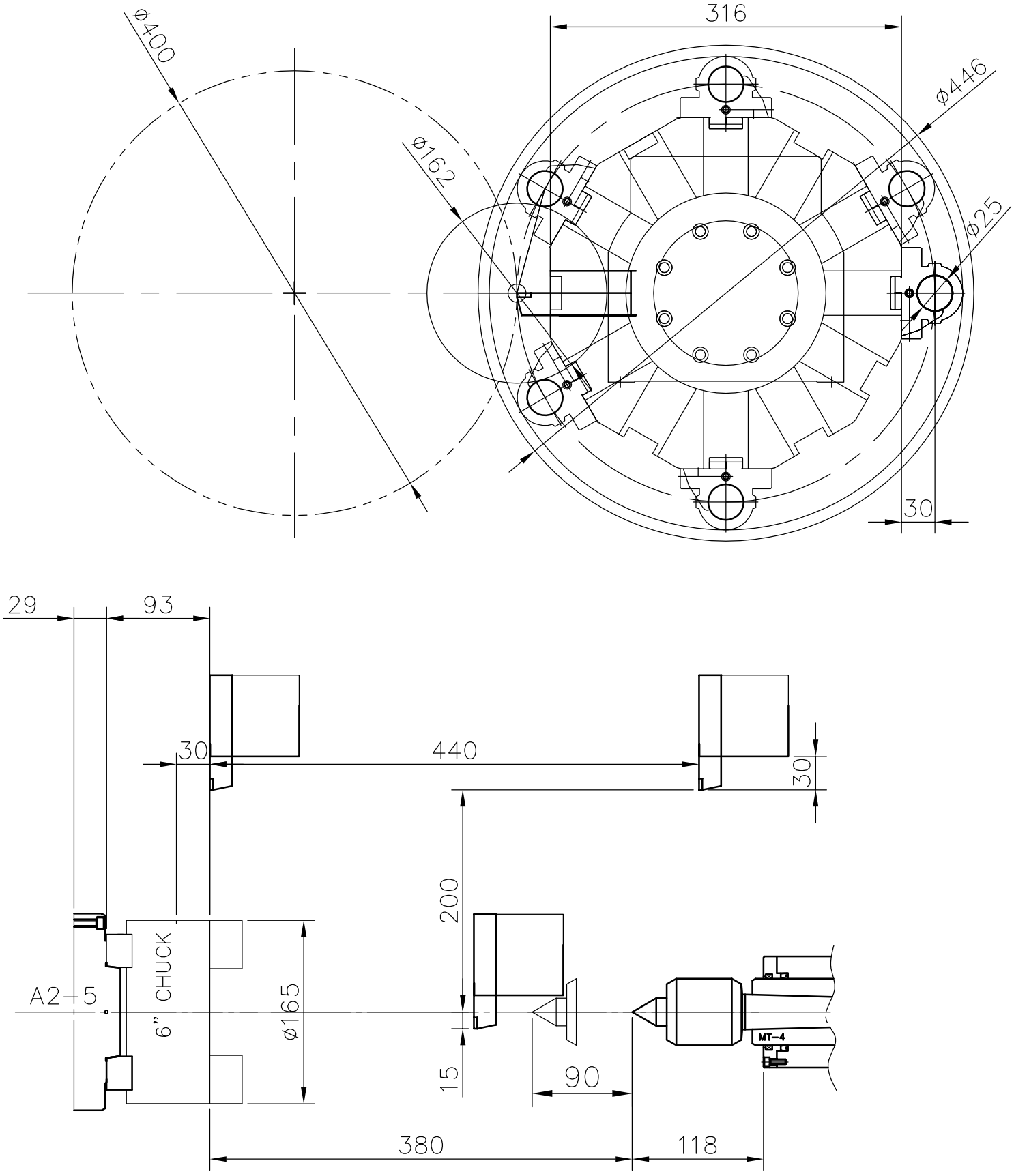


ISO A2-5

*ALEX-TECH MACHINERY INDUSTRIAL CO; LTD*